NUMBER C-160597-E

DIMENSIONS IN m.m. --DO NOT SCALE PRINT

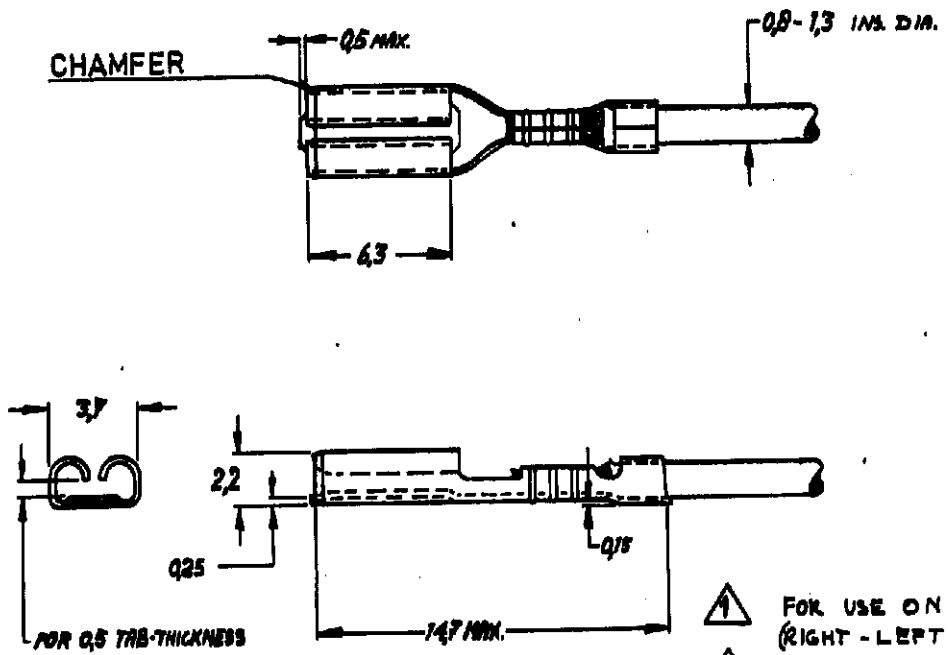

ORDER NR.	FINISH	REMARKS
160597-1	NONE	1
160597-3	SILVER- "	1
160597-4	TIN-PLATED	2
160597-5	GOLD-PLATED	1

1 FOR USE ON STANDARD APPLICATORS (RIGHT - LEFT FEED)

2 FOR USE ON MINIATURE APPLICATORS (LEFT - RIGHT FEED) AMP-O-MATOR APPLICATION

CUSTOMER PRINT
FOR REFERENCE ONLY

© 1966 BY AMP HOLLAND NV. ALL RIGHTS RESERVED AMP PRODUCTS COVERED BY PATENTS AND/OR PATENTS PENDING

-9	-8	-7	-6	-5	-4	-3	-2	-1	DWG SIZE	NUMBER	NAME	REMARKS	ITEM NO.
REQUIRED PER ASSEMBLY													
DESCRIPTION													

MATERIAL: BRASS
HEAT TREAT: ~
FINISH: SEE TABLE

AMP
AMP-HOLLAND N.V.
's-HERTOGENBOSCH HOLLAND

DR. R.Visser. 2-III-'66 DATE
APP. 9/3/66 DATE
CHK DATE
APP. 19/9-66 DATE
REL DATE
FIRST USED

TYPE	PRINT DIST	LOC	SIZE	NUMBER	REV
A.M.		H	A	C-160597-E	D

SCALE	WIRE SIZE	CMA
4-1	0,05-0,15 mm²	MAX ~ MIN ~

NAME: "110 SER." FASTON RECEPTACLE

AMP 1252