Think of Frequency Think of TXC
come visit our site http://www.txccorp.com

Real Time Clock (RTC) SOP-14 RT Series

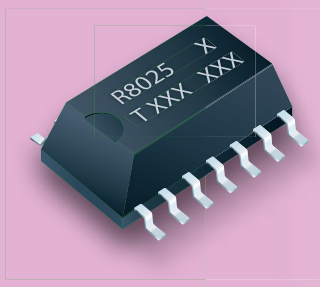

Features

- Build-in 32.768 kHz DTCXO (temperature compensated crystal oscillator)
- Clock operating supply Voltage: 1.4V~5.5V
- Interface voltage range: 1.6~5.5V
- Time keeping voltage: 1.4~5.5V
- High stability ±3.4ppm over -40 to +85 ℃
- 32.768 kHz/ 1024 Hz/ 1 Hz compensated clock output selectable
- I^2C-Bus series interface (400 kHz)
- Calendar, alarm, timer (sec./ min./ hour/ day/ week/ month/ year), valid up to year 2099
- Low power consumption
- 256 bytes of battery-backed SRAM

Electrical Specifications

Item	Parameters	Symbol	Condition		Condition MIN	TYP	MAX	UNITS	Note
1	Nominal Frequency	F0				32.768		kHz	
2	Interface Voltage	Vint			1.6		5.5	V	
3	Supply Voltage	VDD	Time Keeping		1.4		5.5	V	
			Temperature Compensation		2.0		5.5		
4	Current Drain	Icc_1	VDD=3V SDA=SCL=INT=VDD FOE=Vss			0.7	2.8	μA	1
		Icc_2	VDD=5V SDA=SCL=INT=VDD FOE=Vss			1.0	3.4	μA	
5	Temperature Stability	△f/f	RTS1400001	0～+40℃		± 1.9		ppm	
				-40～+85℃		± 3.4			
			RTS1400002	0～+50℃		± 3.8		ppm	
				-40～+85℃		± 5.0			
			RTS1400003	0～+50℃		± 3.8		ppm	
				-40～+85℃		± 5.0			

Note 1: 2.0s temperature compensation interval

Dimensions

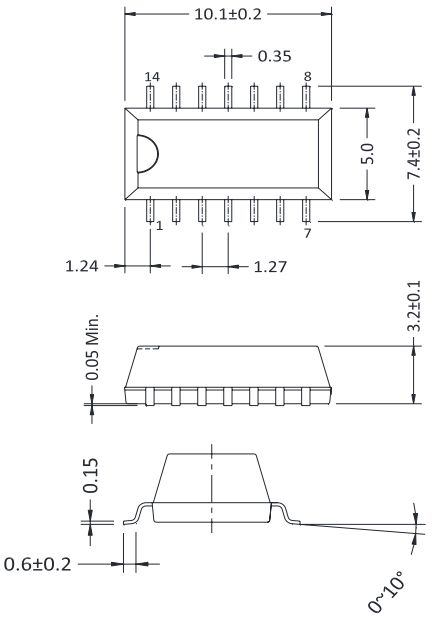

Pin Connection

Pin Name	No.	I/O	Function
NC	1	-	-
SCL	2	Input	Serial clock input pin
FOUT	3	Output	Reference clock output
NC	4	-	-
NC	5	-	-
VDD	6	Input	Connected to a positive power
FOE	7	Input	Enable pin for FOUT control
NC	8	-	-
NC	9	-	-
/INT	10	Output	Interrupt output (N-ch open drain)
GND	11	-	Connected to a ground
NC	12	-	-
SDA	13	I/O	Data input and output pin
NC	14	-	-

* Do not connect Pin1, 4, 5, 8, 9, 12, 14

Land Pattern

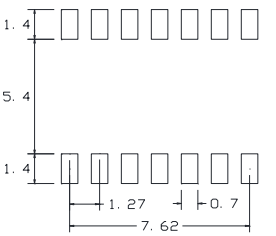

Units: mm

Remark : Specification subject to change without prior notice. Please confirm with our sales. http://www.txccorp.com